SUN METALS
5008 TAMPA WEST BLVD.
TAMPA, FLORIDA 33634

SUNDOR 5000
SLIDING GLASS DOOR
"SMALL MISSILE IMPACT"

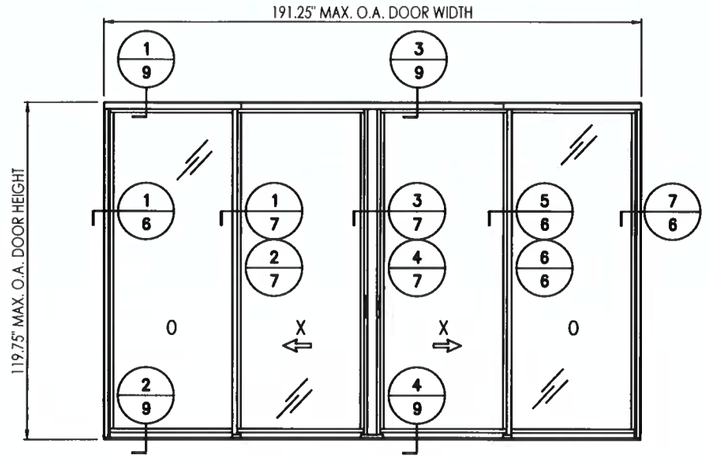

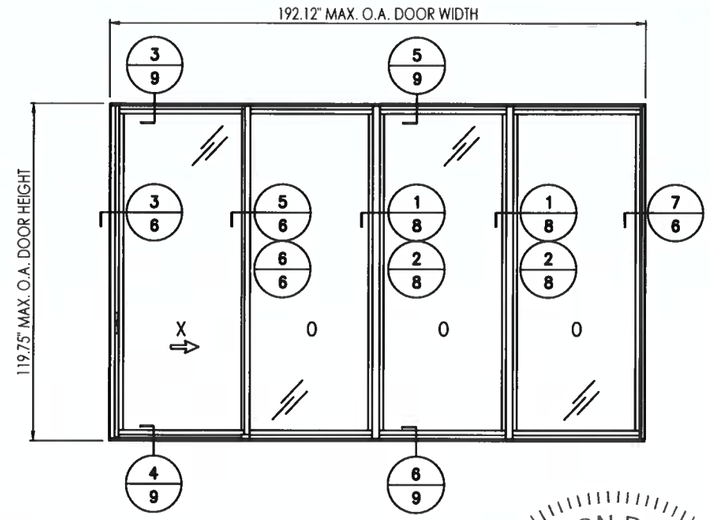

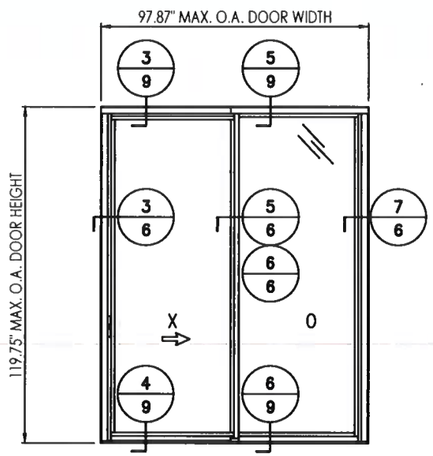

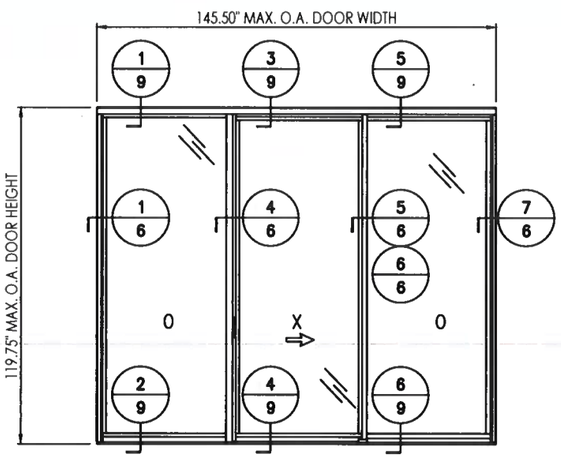

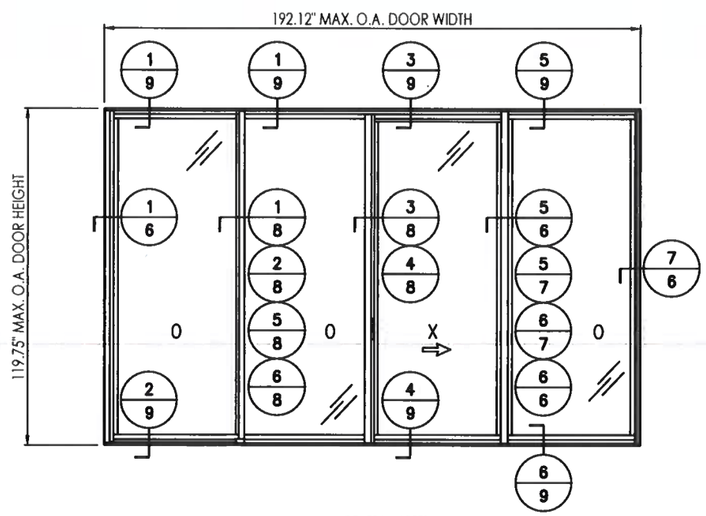

GORDON D. THOMAS
LICENSE
No. 46718
STATE OF FLORIDA
PROFESSIONAL ENGINEER

8/11/25
FL 46718

TABLE OF CONTENTES

SHEET #	DESCRIPTION
1	Typical elevations, design pressures and general notes
2	Door panel details
3	Door panel details
4	Sidelite panel details
5	Corner details
6	Horizontal cross sections
7	Horizontal cross sections
8	Horizontal cross sections
9	Vertical cross sections
10	Anchoring (Max. DP<= 75 PSF)
11	Anchoring (Max. DP<= 135 PSF)
12	Components
13	Bill of materials & Components

MAXIMUM FRAME SIZE (W X H)	REINFORCED	GLAZING TYPE	DESIGN PRESSURE (PSF)	
			POSITIVE	NEGATIVE
192.12" X 119.75"	YES	G1; G2	+100	-100
97.87" X 119.75"	YES	G1; G2	+115	-125
192.12" X 95.75"	NO	G1; G2	+115	-135
192.12" X 119.75"	NO	G1; G2	+70	-75

GENERAL NOTES:

1. This product has been evaluated and is in compliance with the 8th Edition (2023) Florida Building Code (FBC) structural requirements including the "High Velocity Hurricane Zone" (HVHZ).
2. Product anchors shall be as listed and spaced as shown on details. Anchor embedment to base material shall be beyond wall dressing or stucco.
3. When used in "HVHZ", for installation above 30 feet above grade, this product complies with Section 1626 of the Florida Building Code as a small missile impact resistant product and does not require an impact resistant covering. For installations 30 feet or less above grade, this product must be protected with an impact resistant covering that complies with Section 1626 of the Florida Building Code.
4. When used in areas outside of the "HVHZ" requiring wind borne debris protection, for installations above 30 feet above grade this product complies with Section 1609.1.2 of the 2023 FBC as a small missile impact resistant product and does not require an impact resistant covering. For installations 30 feet or less above grade, this product must be protected with an impact resistant covering that complies with Section 1609.1.2 of the Florida Building Code.
5. Site conditions that deviate from the details of this drawing require further engineering analysis by a licensed engineer or registered architect.
6. This product meets water infiltration requirements for "HVHZ".
7. Gaskets and setting blocks shall comply with Section 2411.3.4 of the FBC.
8. Aluminum components including fasteners, shall meet the requirements of FBC Section 2003.

5008 TAMPA WEST BLVD.
TAMPA, FLORIDA 33634
PHONE: (813) 889-0718
FAX: (813) 886-0666
SUN METALS

PRODUCT: SLIDING GLASS DOOR

PART OR ASSEMBLY: TYPICAL ELEVATIONS, DESIGN PRESSURES & GENERAL NOTES

NO	DATE	DESCRIPTION	BY
7	7/14/25	UPDATE TO 8TH ED. (2023) FBC	ECV
6	9/21/20	UPDATE TO 7TH ED. (2020) FBC	JCB
5	8/9/19	UPDATE TO 6TH ED. (2017) FBC	ECV
4	3/14/17	REV PER ADDITIONAL COMMENTS	CO
3	1/4/17	REV GLAZING PER ADDITIONAL TEST	ECV
2	2/26/16	CHANGE INT. .060 SGP TO .060 PVB	CO
1	2/17/15	UPDATE TO 5TH ED. (2014) FBC	LFS

REVISIONS

DATE: 02/26/16

SCALE: NTS

DWG. BY: CO

CHK BY: ECV

DRAWING NO.: FL-15903.2

SHEET: 1 OF 13

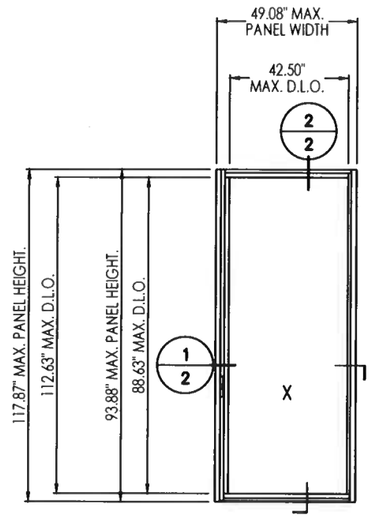

OPERABLE PANEL

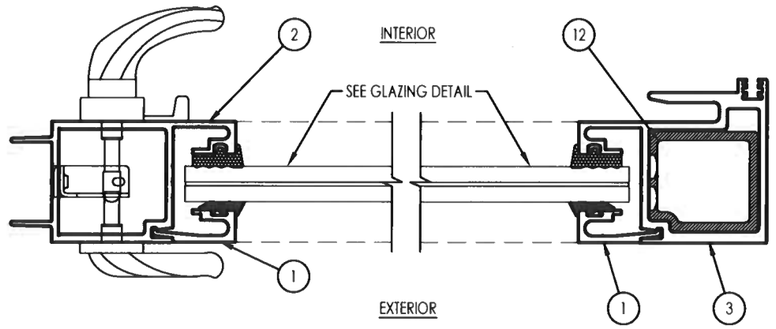

1/2 HORIZONTAL CROSS SECTION

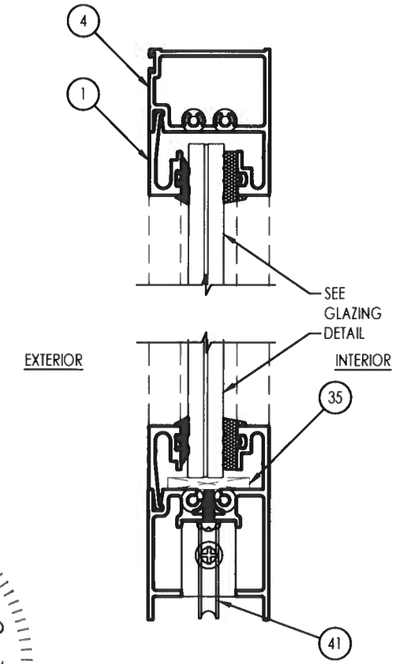

2/2 VERTICAL CROSS SECTION

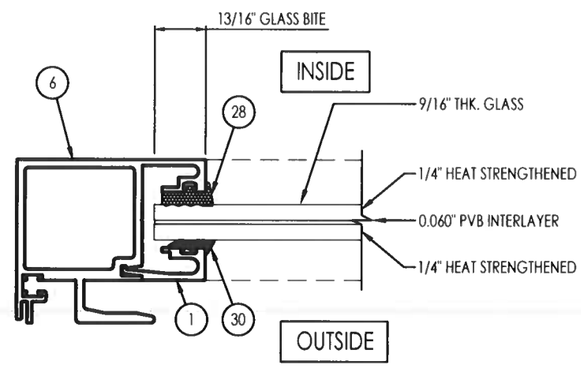

G2 GLAZING DETAIL (DRY GLAZED)
MONOLITHIC
9/16" LAMINATED GLASS

GORDON D. THOMAS
LICENSE
No. 46718
STATE OF FLORIDA
PROFESSIONAL ENGINEER
7/14/25
FL 46718

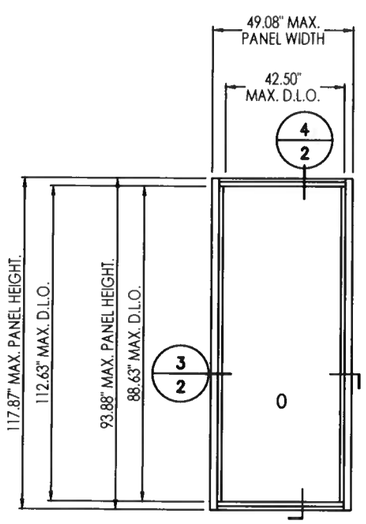

FIXED PANEL

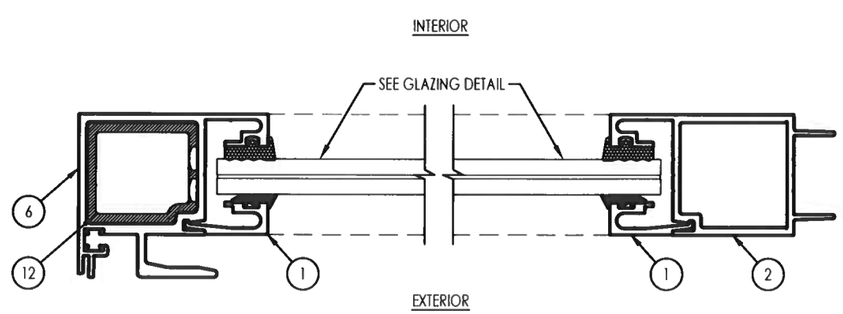

3/2 HORIZONTAL CROSS SECTION

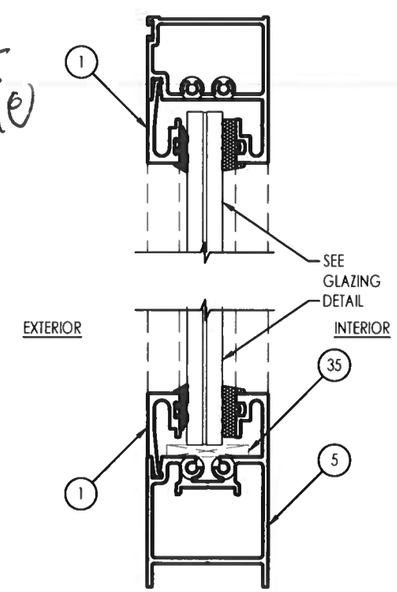

4/2 VERTICAL CROSS SECTION

5008 TAMPA WEST BLVD.
TAMPA, FLORIDA 33634
PHONE: (813) 889-0718
FAX: (813) 886-0666

SUN METALS

PRODUCT: SLIDING GLASS DOOR

PART OR ASSEMBLY: DOOR PANEL DETAILS

NO	DATE	DESCRIPTION	BY
7	7/14/25	UPDATE TO 8TH ED. (2023)	ECV
6	9/21/20	UPDATE TO 7TH ED. (2020)	JCB
5	8/9/19	UPDATE TO 6TH ED. (2017)	ECV
4	3/14/17	REV PER ADDITIONAL COMMENTS	CO
3	1/4/17	REV GLAZING PER ADDITIONAL TEST	ECV
2	2/26/16	CHANGE INT. .060 SGP TO .060 PVB	CO
1	2/17/15	UPDATE TO 5TH ED. (2014)	LFS

REVISIONS

DATE: 02/26/16

SCALE: NTS

DWG. BY: CO

CHK BY: ECV

DRAWING NO.: FL-15903.2

SHEET: 2 OF 13

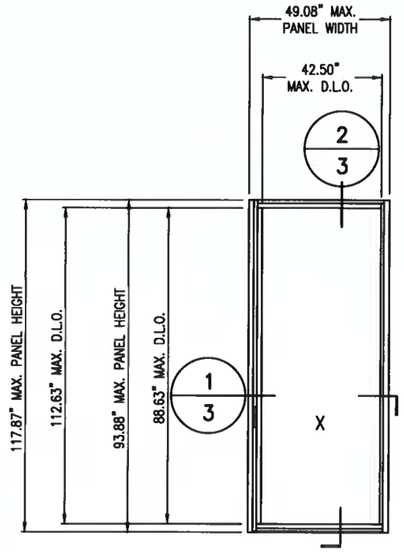

OPERABLE PANEL

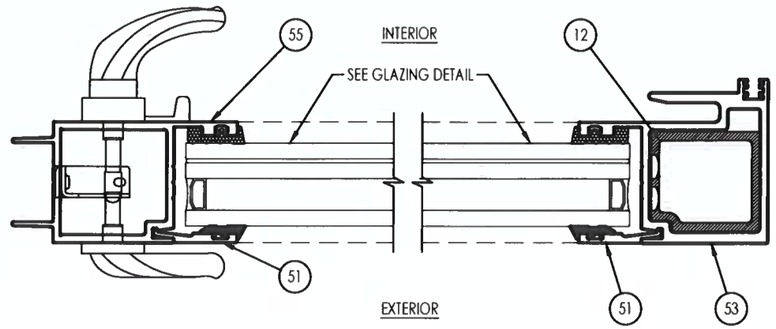

1/3 HORIZONTAL CROSS SECTION

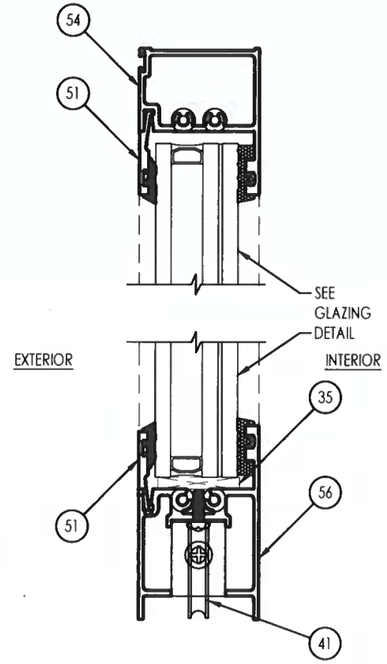

2/3 VERTICAL CROSS SECTION

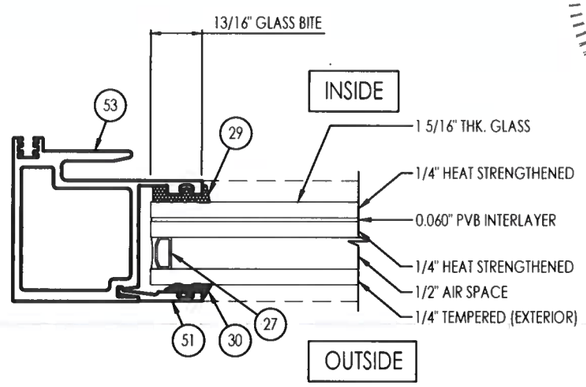

G1 GLAZING DETAIL (DRY GLAZED)
1 5/16" LAMINATED I.G. GLASS

GORDON D. THOMAS
LICENSE
No. 46718
STATE OF FLORIDA
PROFESSIONAL ENGINEER

8/11/25
FL 46718

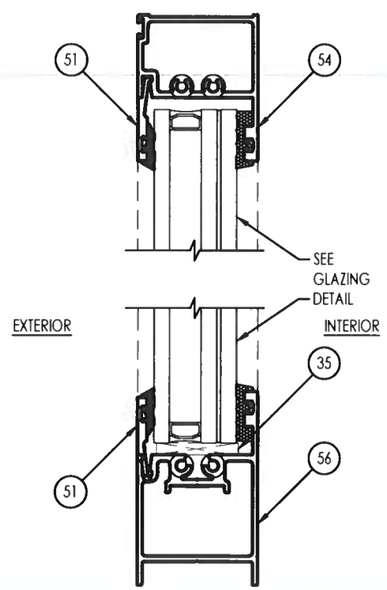

3/3 HORIZONTAL CROSS SECTION

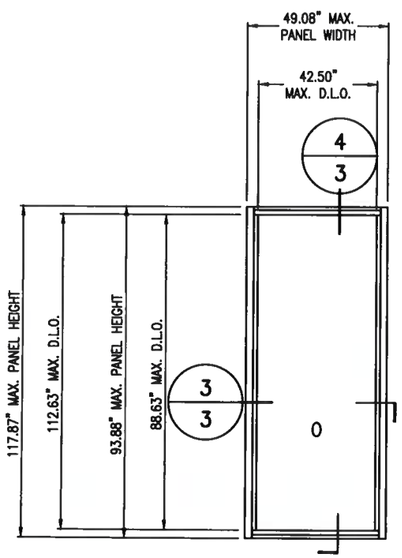

FIXED PANEL

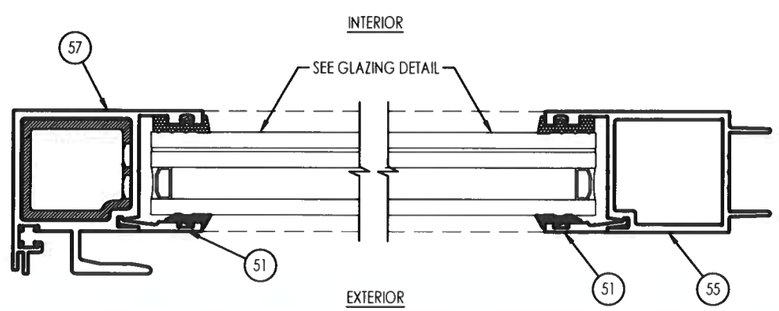

4/3 VERTICAL CROSS SECTION

5008 TAMPA WEST BLVD.
TAMPA, FLORIDA 33634
PHONE: (813) 889-0718
FAX: (813) 886-0666

SUN METALS

PRODUCT: SLIDING GLASS DOOR

PART OR ASSEMBLY: DOOR PANEL DETAILS

NO	DATE	DESCRIPTION	BY
7	7/14/25	UPDATE TO 8TH ED. (2023) FBC	ECV
6	9/21/20	UPDATE TO 7TH ED. (2020) FBC	JOB
5	8/9/19	UPDATE TO 6TH ED. (2017) FBC	ECV
4	3/14/17	REV PER ADDITIONAL COMMENTS	CO
3	1/4/17	REV GLAZING PER ADDITIONAL TEST	ECV
2	2/26/16	CHANGE INT. .060 SGP TO .060 PVB	CO
1	2/17/15	UPDATE TO 5TH ED. (2014) FBC	LFS

REVISIONS

DATE: 02/26/16

SCALE: NTS

DWG. BY: CO

CHK BY: ECV

DRAWING NO.: FL-15903.2

SHEET: 3 OF 13

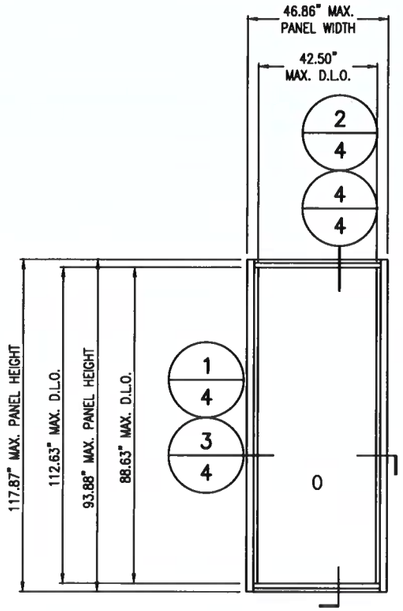

SIDELITE PANEL

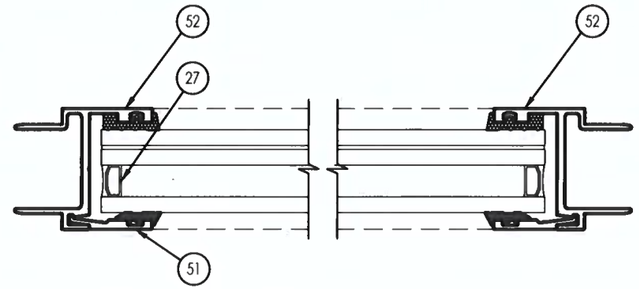

1/4 HORIZONTAL CROSS SECTION

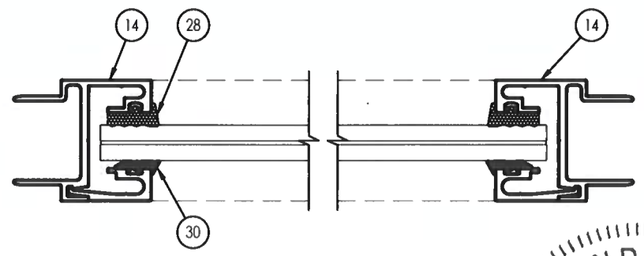

3/4 HORIZONTAL CROSS SECTION

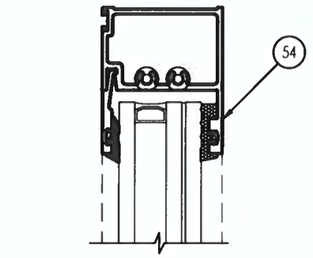

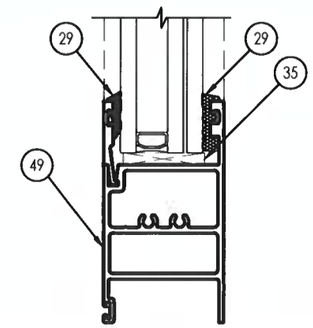

2/4 VERTICAL CROSS SECTION

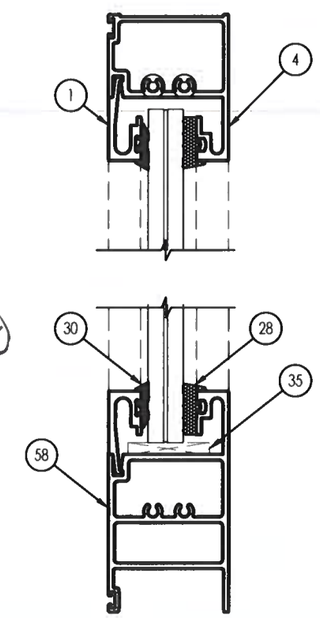

4/4 VERTICAL CROSS SECTION

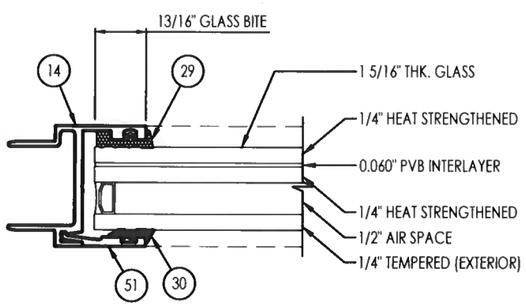

G1 GLAZING DETAIL
1 5/16" LAMINATED I.G. GLASS

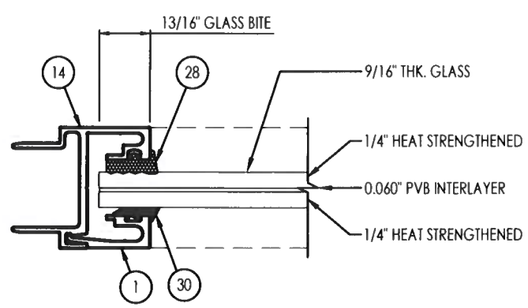

G2 GLAZING DETAIL
MONOLITHIC
9/16" LAMINATED GLASS

SUN METALS
5008 TAMPA WEST BLVD.
TAMPA, FLORIDA 33634
PHONE: (813) 889-0718
FAX: (813) 886-0666

PRODUCT: SLIDING GLASS DOOR

PART OR ASSEMBLY: SIDELITE PANEL DETAILS

NO	DATE	DESCRIPTION	BY
7	7/14/25	UPDATE TO 8TH ED. (2023) FBC	ECV
6	9/21/20	UPDATE TO 7TH ED. (2020) FBC	JCB
5	8/9/19	UPDATE TO 6TH ED. (2017) FBC	ECV
2	2/26/16	CHANGE INT. .060 SGP TO .060 PVB	CO
1	2/17/15	UPDATE TO 5TH ED. (2014) FBC	LFS

REVISIONS

DATE: 02/26/16

SCALE: NTS

DWG. BY: CO

CHK BY: ECV

DRAWING NO.: FL-15903.2

SHEET: 4 OF 13

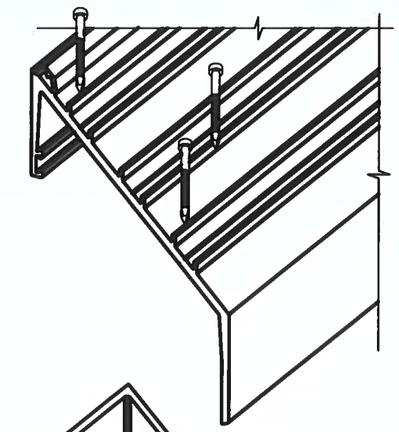

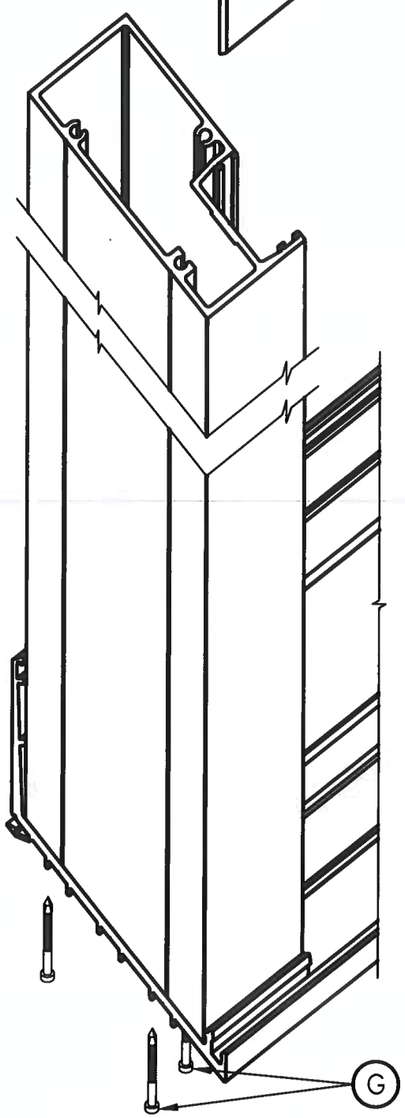

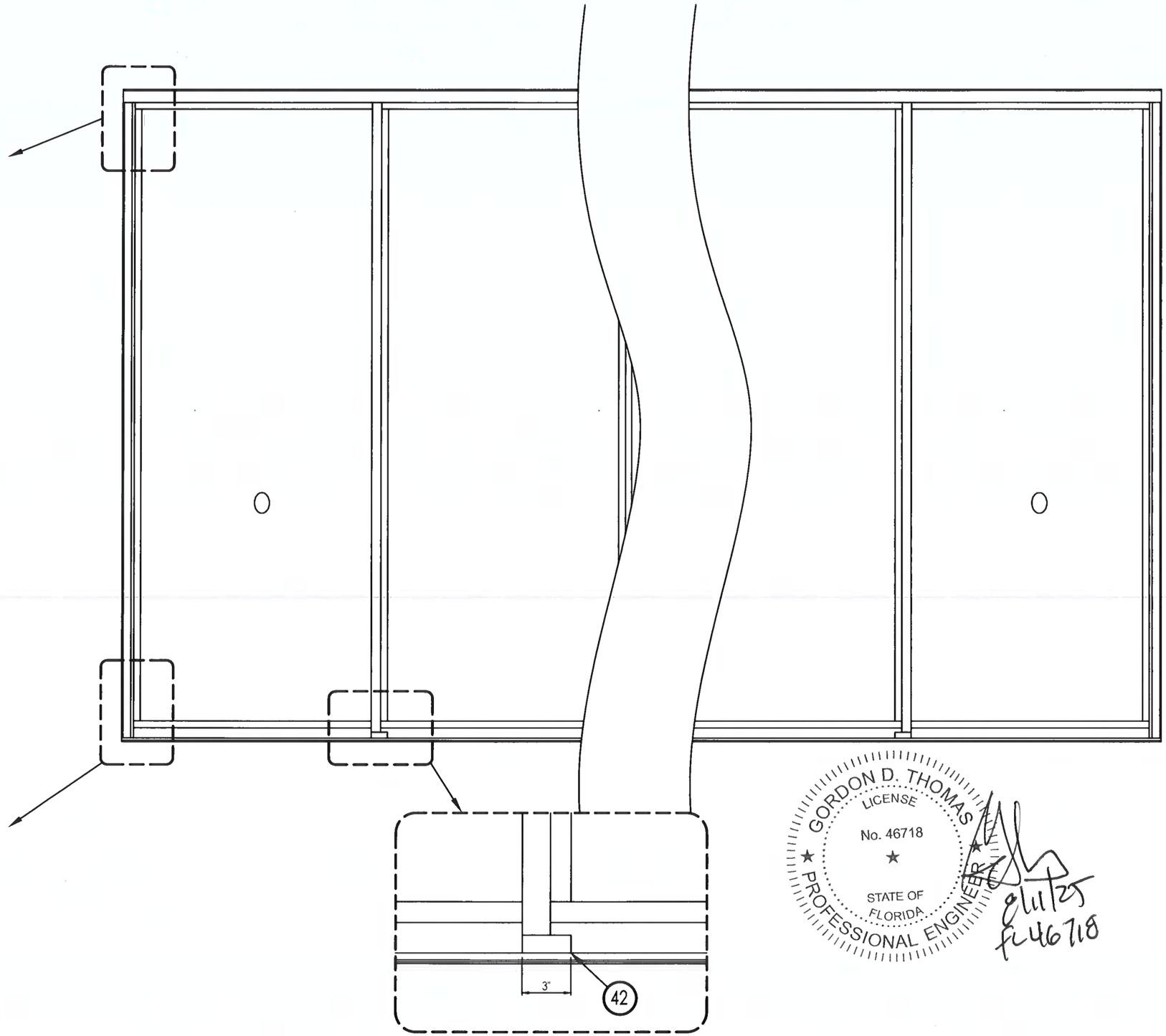

GORDON D. THOMAS
LICENSE
No. 46718
STATE OF FLORIDA
PROFESSIONAL ENGINEER

8/11/25
FL46718

SUN METALS
5008 TAMPA WEST BLVD.
TAMPA, FLORIDA 33634
PHONE: (813) 889-0718
FAX: (813) 886-0666

PRODUCT: SLIDING GLASS DOOR

PART OR ASSEMBLY: CORNER DETAILS

NO	DATE	DESCRIPTION	BY
7	7/14/25	UPDATE TO 8TH ED. (2023) FBC	ECV
6	9/21/20	UPDATE TO 7TH ED. (2020) FBC	JCB
5	8/9/19	UPDATE TO 6TH ED. (2017) FBC	ECV
2	2/26/16	CHANGE INT. .060 SGP TO .060 PVB	CO
1	2/17/15	UPDATE TO 5TH ED. (2014) FBC	LFS

REVISIONS

DATE: 02/26/16

SCALE: NTS

DWG. BY: CO

CHK BY: ECV

DRAWING NO.: FL-15903.2

SHEET: 5 OF 13

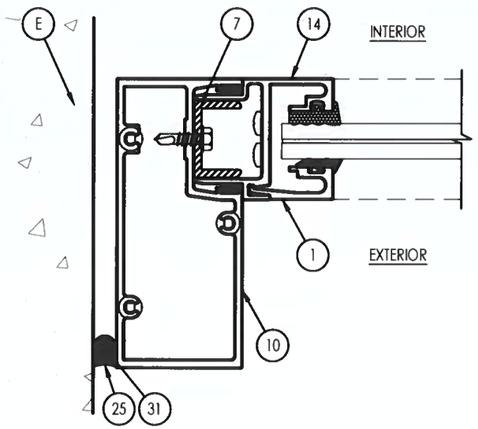

1/6 HORIZONTAL CROSS SECTION
Panel at interior track fixed

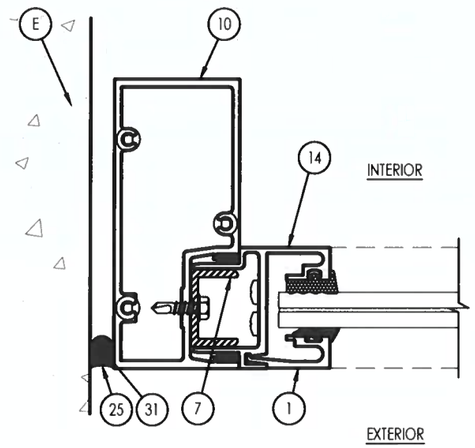

2/6 HORIZONTAL CROSS SECTION
Panel at exterior track fixed

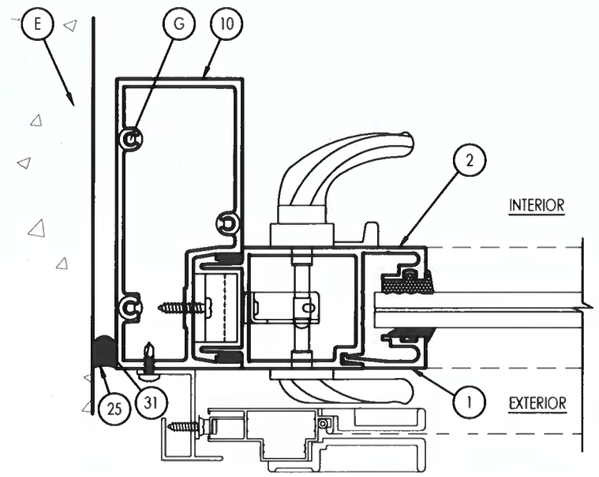

3/6 HORIZONTAL CROSS SECTION

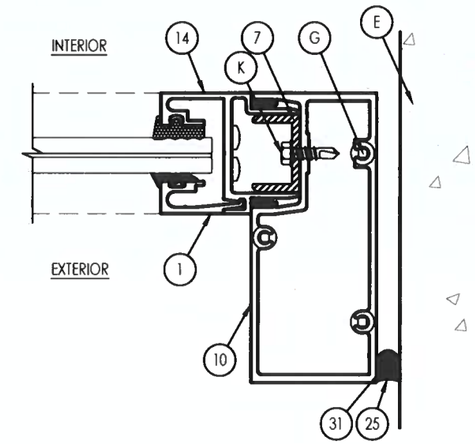

7/6 HORIZONTAL CROSS SECTION

GORDON D. THOMAS
LICENSE
No. 46718
STATE OF FLORIDA
PROFESSIONAL ENGINEER

8/11/25
FL 46718

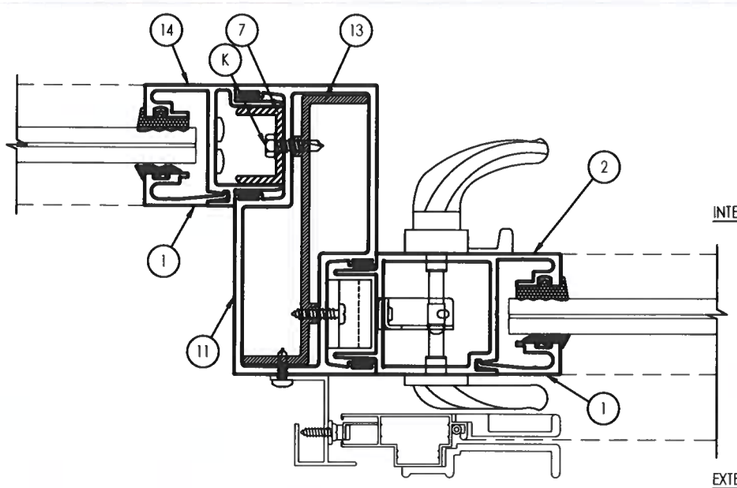

4/6 HORIZONTAL CROSS SECTION
OXO Adapter requires
OXO Reinforcement

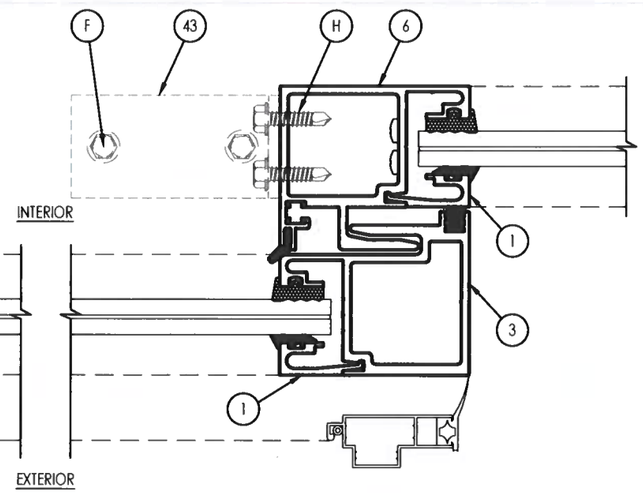

5/6 HORIZONTAL CROSS SECTION
Without Reinforcement

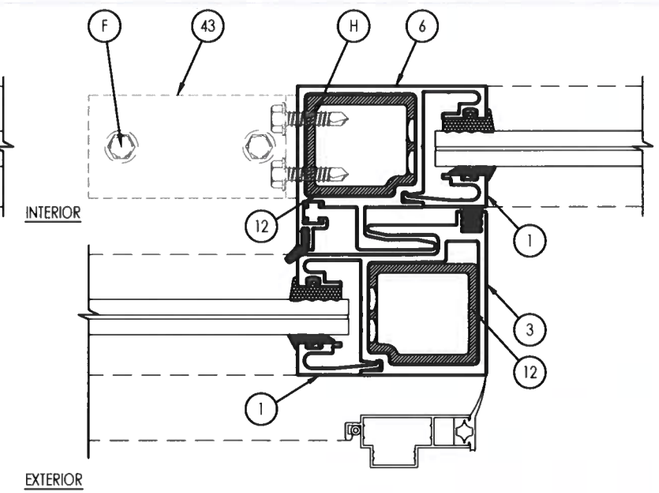

6/6 HORIZONTAL CROSS SECTION
With Reinforcement

5008 TAMPA WEST BLVD.
TAMPA, FLORIDA 33634
PHONE: (813) 889-0718
FAX: (813) 886-0666

SUN METALS

PRODUCT: SLIDING GLASS DOOR

PART OR ASSEMBLY: HORIZONTAL CROSS SECTIONS

NO	DATE	DESCRIPTION	BY
7	7/14/25	UPDATE TO 8TH ED. (2023) FBC	ECV
6	9/21/20	UPDATE TO 7TH ED. (2020) FBC	JCB
5	8/9/19	UPDATE TO 6TH ED. (2017) FBC	ECV
2	2/26/16	CHANGE INT. .060 SCP TO .060 PVB	CO
1	2/17/15	UPDATE TO 5TH ED. (2014) FBC	LFS

REVISIONS

DATE: 02/26/16

SCALE: NTS

DWG. BY: CO

CHK BY: ECV

DRAWING NO.: FL-15903.2

SHEET: 6 OF 13

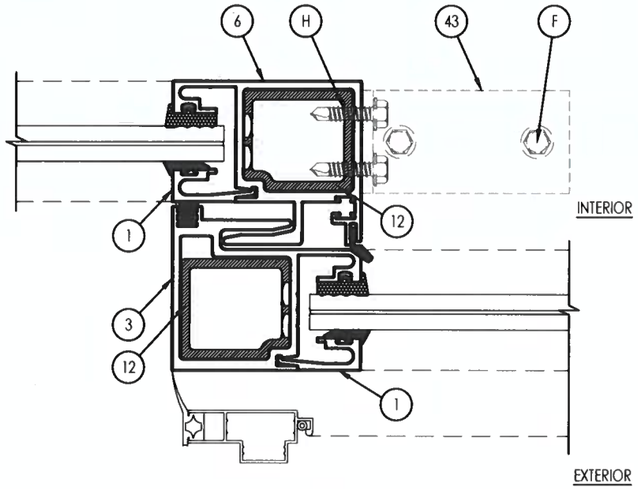

1/7 HORIZONTAL CROSS SECTION
With Reinforcement

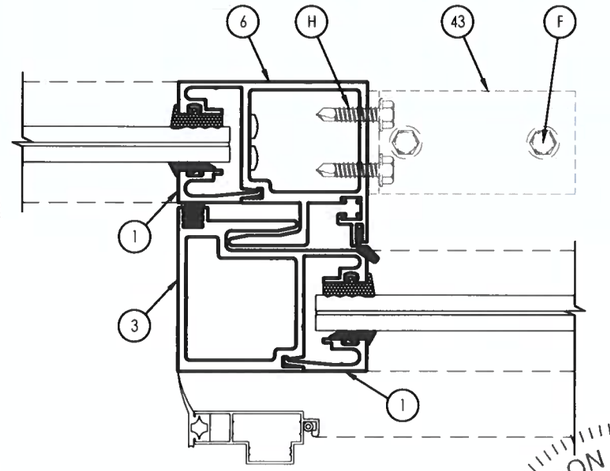

2/7 HORIZONTAL CROSS SECTION
Without Reinforcement

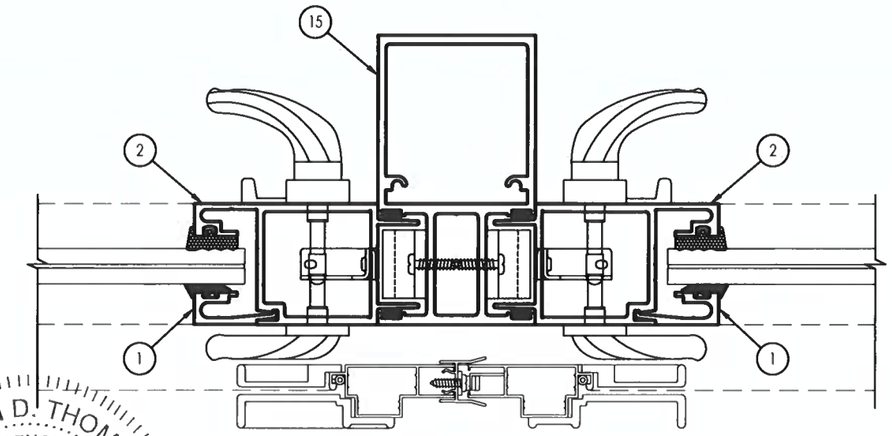

4/7 HORIZONTAL CROSS SECTION
Without Reinforcement

GORDON D. THOMAS
LICENSE
No. 46718
STATE OF FLORIDA
PROFESSIONAL ENGINEER

8/1/25
FL 46718

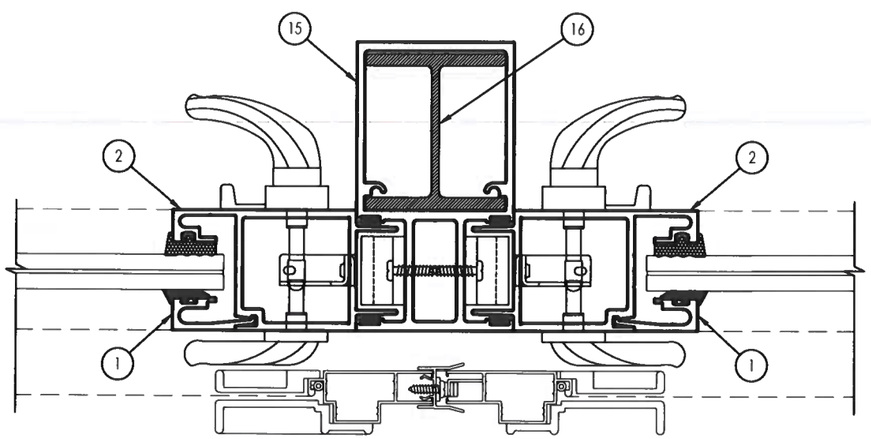

3/7 HORIZONTAL CROSS SECTION
With Reinforcement

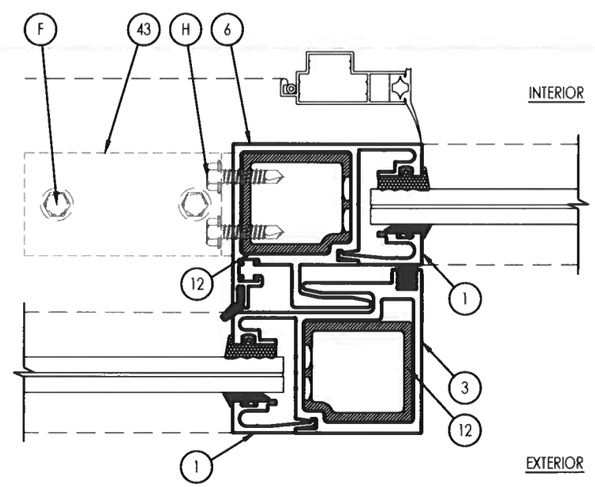

5/7 HORIZONTAL CROSS SECTION
With Reinforcement
With Interior Screen

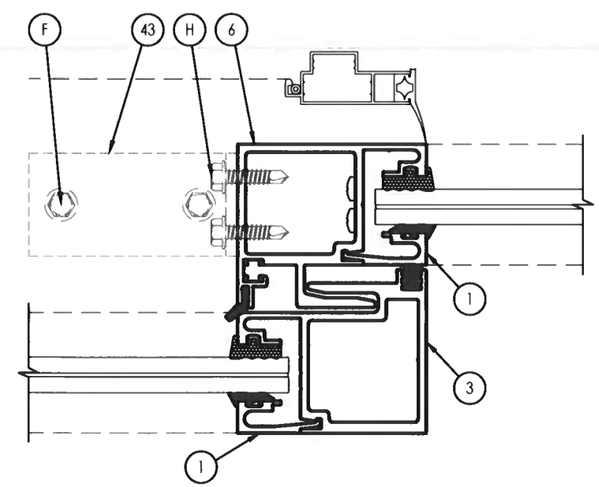

6/7 HORIZONTAL CROSS SECTION
With Reinforcement
With Interior Screen

5008 TAMPA WEST BLVD.
TAMPA, FLORIDA 33634
PHONE: (813) 889-0718
FAX: (813) 886-0666

SUN METALS

PRODUCT: SLIDING GLASS DOOR

PART OR ASSEMBLY: HORIZONTAL CROSS SECTIONS

NO	DATE	DESCRIPTION	BY
7	7/14/25	UPDATE TO 8TH ED. (2023) FBC	ECV
6	9/21/20	UPDATE TO 7TH ED. (2020) FBC	JCB
5	8/9/19	UPDATE TO 6TH ED. (2017) FBC	ECV
2	2/26/16	CHANGE INT. .060 SGP TO .060 PVB	CO
1	2/17/15	UPDATE TO 5TH ED. (2014) FBC	LFS

REVISIONS

DATE: 02/26/16

SCALE: NTS

DWG. BY: CO

CHK BY: ECV

DRAWING NO.: FL-15903.2

SHEET: 7 OF 13

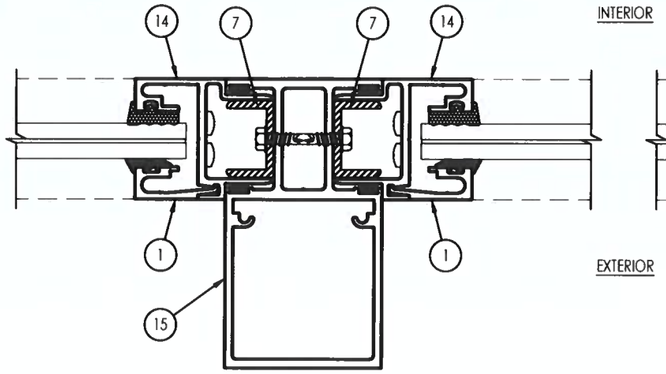

1/8 HORIZONTAL CROSS SECTION
Without Reinforcement
Panel at Interior track fixed

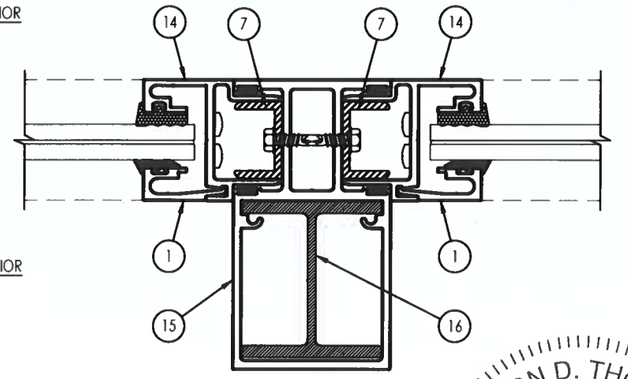

2/8 HORIZONTAL CROSS SECTION
With Reinforcement
Panel at Interior track fixed

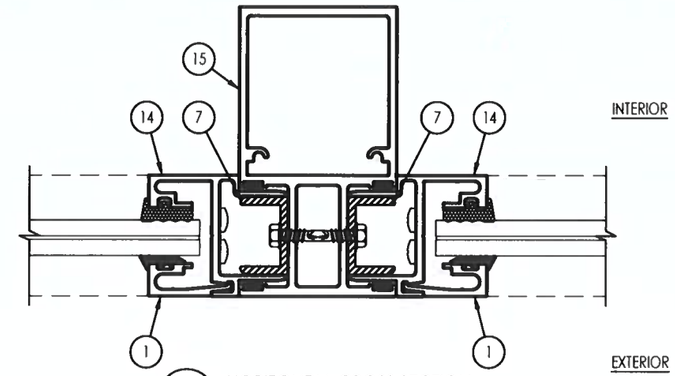

5/8 HORIZONTAL CROSS SECTION
Without Reinforcement
Panel at exterior track fixed

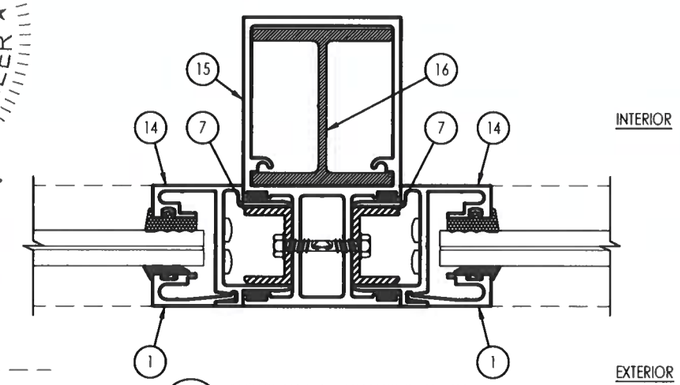

6/8 HORIZONTAL CROSS SECTION
With Reinforcement
Panel at exterior track fixed

GORDON D. THOMAS
LICENSE
No. 46718
STATE OF FLORIDA
PROFESSIONAL ENGINEER
8/11/25
FL 46718

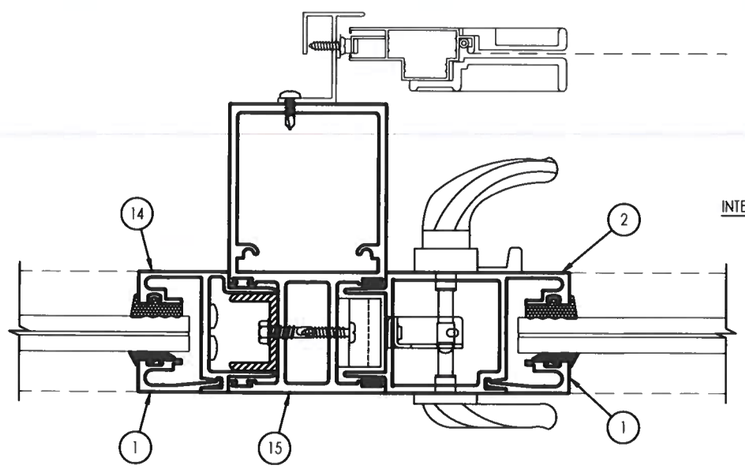

3/8 HORIZONTAL CROSS SECTION
Without Reinforcement
Panel at exterior track fixed

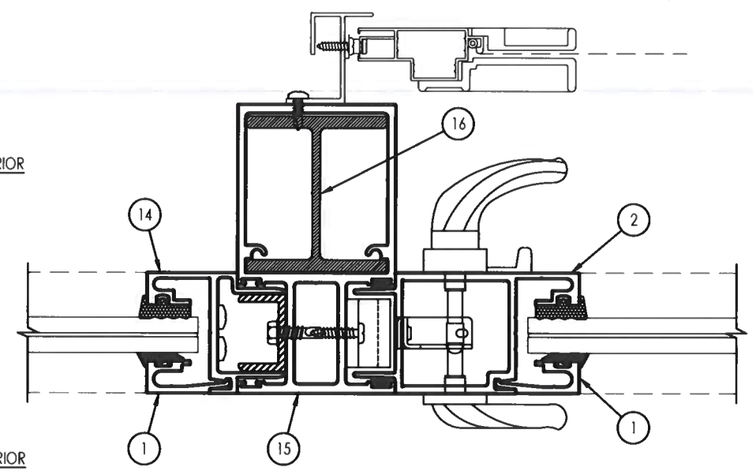

4/8 HORIZONTAL CROSS SECTION
With Reinforcement
Panel at exterior track fixed

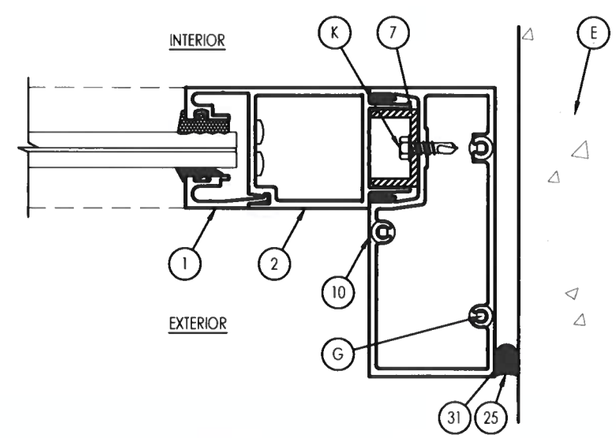

7/8 HORIZONTAL CROSS SECTION
Panel at interior track fixed

5008 TAMPA WEST BLVD.
TAMPA, FLORIDA 33634
PHONE: (813) 889-0718
FAX: (813) 886-0666

SUN METALS

PRODUCT: SLIDING GLASS DOOR

PART OR ASSEMBLY: HORIZONTAL CROSS SECTIONS

NO	DATE	DESCRIPTION	BY
7	7/14/25	UPDATE TO 8TH ED. (2023) FBC	ECV
6	9/21/20	UPDATE TO 7TH ED. (2020) FBC	JCB
5	8/9/19	UPDATE TO 6TH ED. (2017) FBC	ECV
2	2/26/16	CHANGE INT. .060 SSP TO .060 PVB	CO
1	2/17/15	UPDATE TO 5TH ED. (2014) FBC	LFS

REVISIONS

DATE: 02/26/16

SCALE: NTS

DWG. BY: CO

CHK BY: ECV

DRAWING NO.: FL-15903.2

SHEET: 8 OF 13

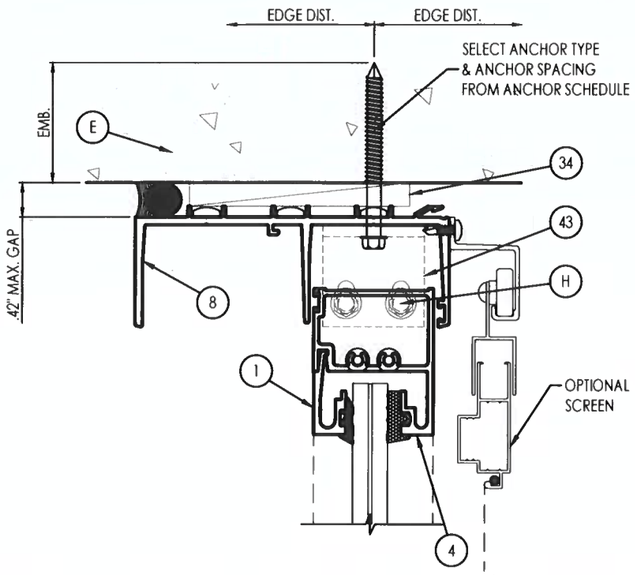

1/9 VERTICAL CROSS SECTION

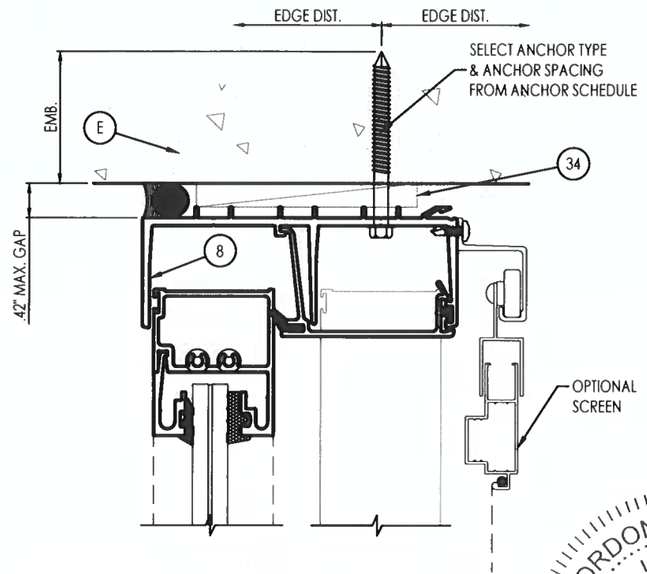

3/9 VERTICAL CROSS SECTION

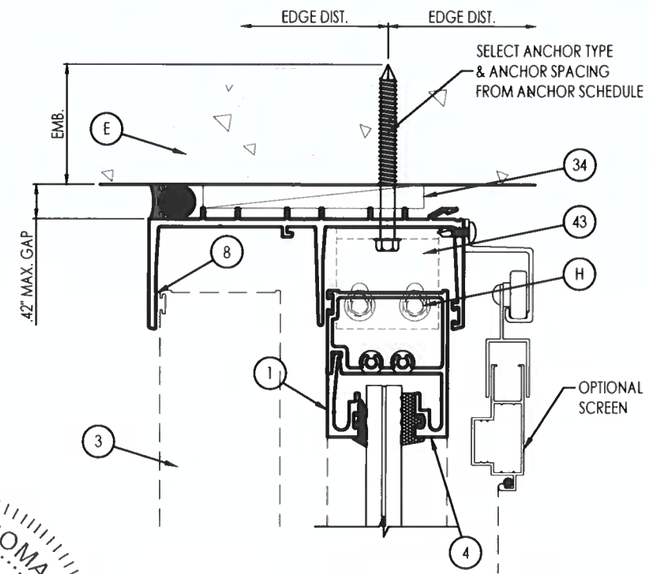

5/9 VERTICAL CROSS SECTION

GORDON D. THOMAS
LICENSE
No. 46718
STATE OF
FLORIDA
PROFESSIONAL ENGINEER

7/14/25
FL 46718

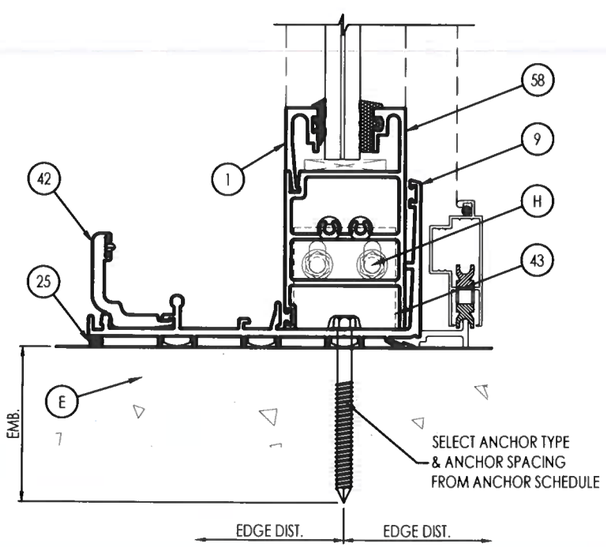

2/9 VERTICAL CROSS SECTION

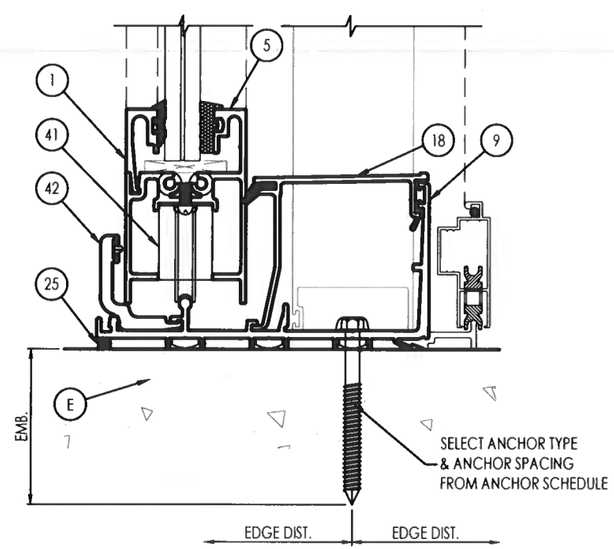

4/9 VERTICAL CROSS SECTION

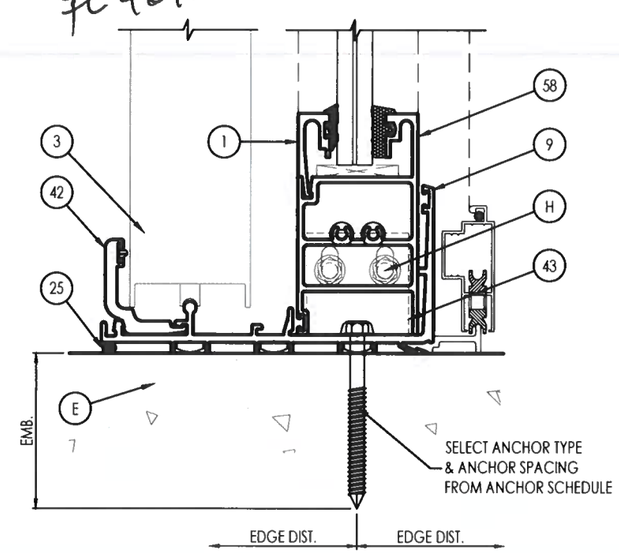

6/9 VERTICAL CROSS SECTION

5008 TAMPA WEST BLVD.
TAMPA, FLORIDA 33634
PHONE: (813) 889-0718
FAX: (813) 886-0666

SUN METALS

PRODUCT: SLIDING GLASS DOOR

PART OR ASSEMBLY: VERTICAL CROSS SECTIONS

NO	DATE	DESCRIPTION	BY
7	7/14/25	UPDATE TO 8TH ED. (2023) FBC	ECV
6	9/21/20	UPDATE TO 7TH ED. (2020) FBC	JCB
5	8/9/19	UPDATE TO 6TH ED. (2017) FBC	ECV
2	2/26/16	CHANGE INT. .060 SCP TO .060 PVB	CO
1	2/17/15	UPDATE TO 5TH ED. (2014) FBC	LFS

REVISIONS

DATE: 02/26/16

SCALE: NTS

DWG. BY: CO

CHK BY: ECV

DRAWING NO.: FL-15903.2

SHEET: 9 OF 13

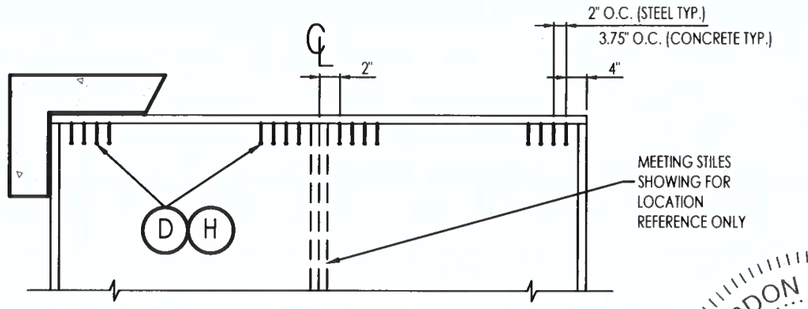

FRAME ANCHORING @ HEAD

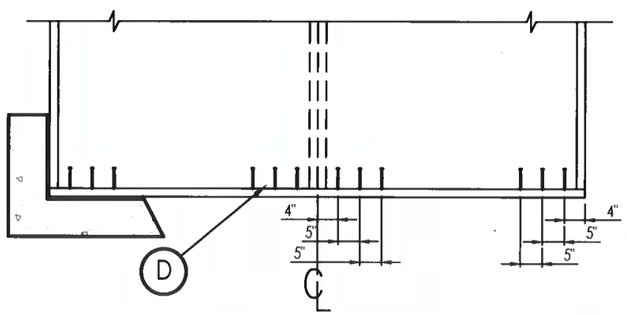

FRAME ANCHORING @ SILL

GORDON D. THOMAS
LICENSE
No. 46718
STATE OF FLORIDA
PROFESSIONAL ENGINEER

8/11/25
FL 46718

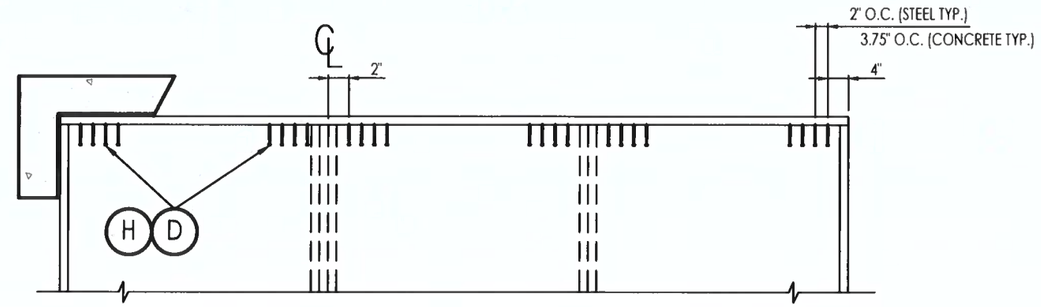

FRAME ANCHORING @ HEAD

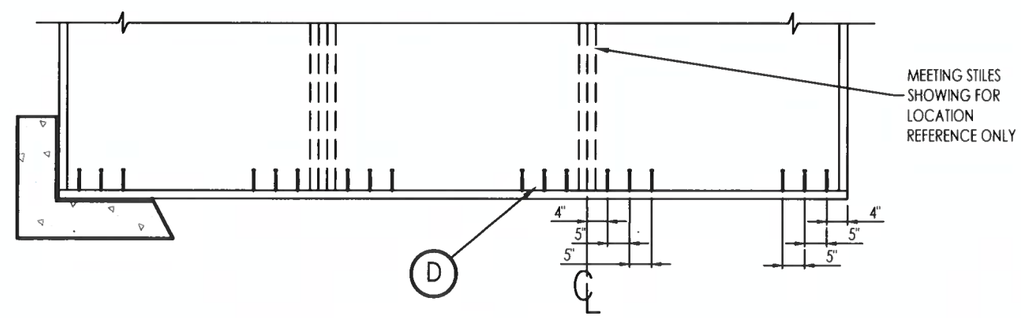

FRAME ANCHORING @ SILL

MAX. DP <= 75 PSF

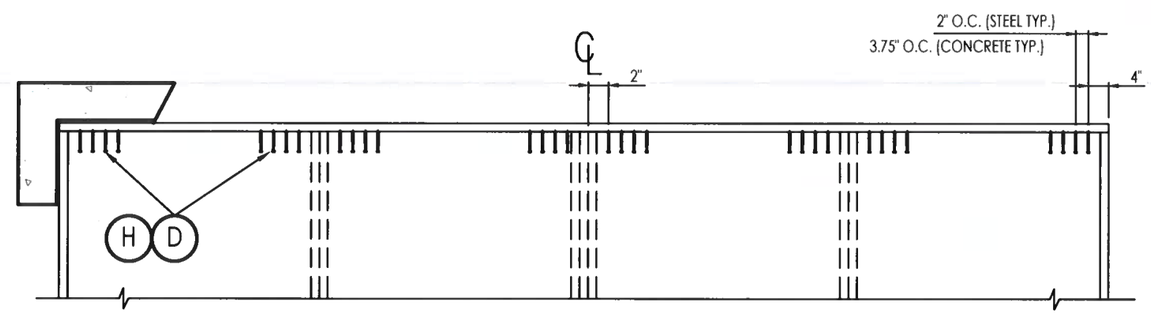

FRAME ANCHORING @ HEAD

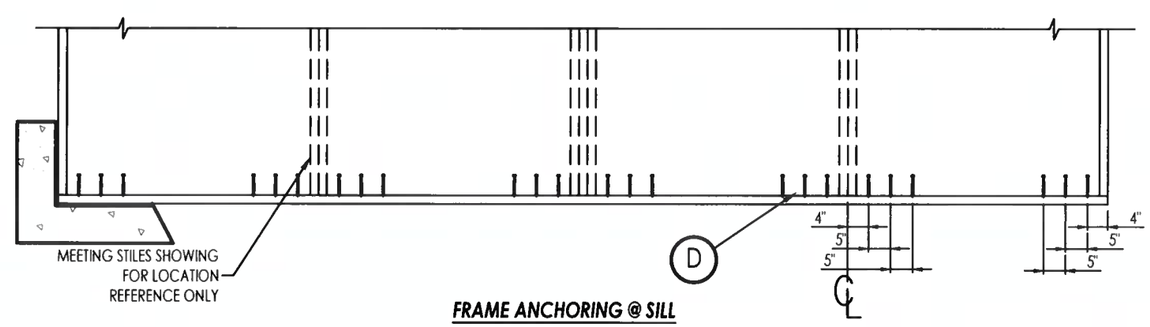

FRAME ANCHORING @ SILL

SUBSTRATE		ANCHOR SCHEDULE
CONCRETE	D	5/16" Ø HWH ITW Tapcon® XL concrete anchor with 1-3/4" min. embedment, 2-3/16" minimum edge distance and 3-3/4" minimum clearance to adjacent concrete anchors. Concrete is 3,000 PSI minimum conforming to ACI 301.
STEEL	H	1/4-20 HWH Hilti KWIK-FLEX® self drilling screws. Steel with 0.125" minimum wall thickness conforming to ASTM A500 Grade B, Fy=46,000 PSI & Fu=58,000 PSI or ASTM A653, Fy=33,000 PSI, Fu= 45,000 PSI. Minimum embedment of 3 threads through steel substrate, with 1" min. edge distance and 1" min. CL to CL spacing.

5008 TAMPA WEST BLVD.
TAMPA, FLORIDA 33634
PHONE: (813) 889-0718
FAX: (813) 886-0666

SUN METALS

PRODUCT: SLIDING GLASS DOOR

PART OR ASSEMBLY: ANCHORING (MAX DP <= 75 PSF)

NO	DATE	DESCRIPTION	BY
7	7/14/25	UPDATE TO 8TH ED. (2023) FBC	ECV
6	9/21/20	UPDATE TO 7TH ED. (2020) FBC	JCB
5	8/9/19	UPDATE TO 6TH ED. (2017) FBC	ECV
2	2/26/16	CHANGE INT. .060 SCP TO .060 PVB	CO
1	2/17/15	UPDATE TO 5TH ED. (2014) FBC	LFS

REVISIONS

DATE: 02/26/16

SCALE: NTS

DWG. BY: CO

CHK BY: ECV

DRAWING NO.: FL-15903.2

SHEET: 10 OF 13

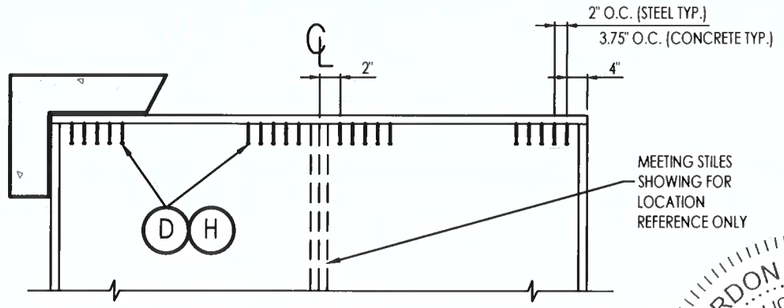

FRAME ANCHORING @ HEAD

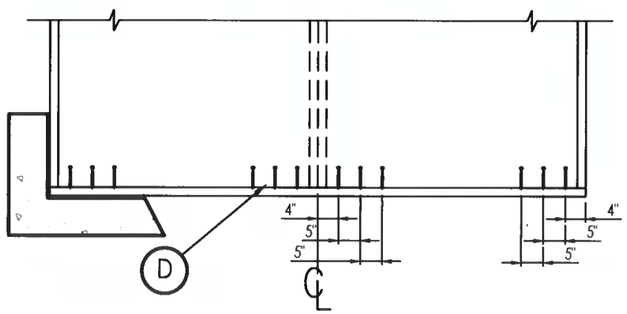

FRAME ANCHORING @ SILL

GORDON D. THOMAS
LICENSE
No. 46718
STATE OF FLORIDA
PROFESSIONAL ENGINEER

8/11/25
FL46718

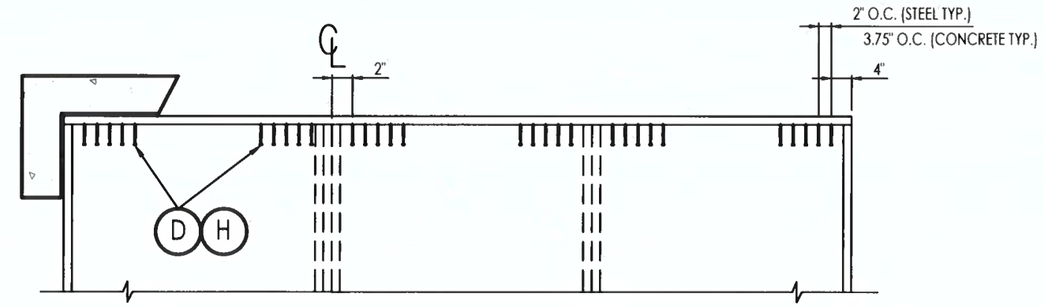

FRAME ANCHORING @ HEAD

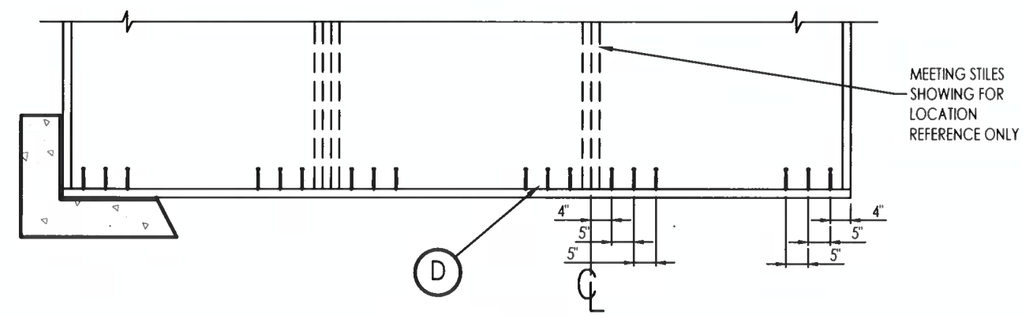

FRAME ANCHORING @ SILL

MAX. DP <= 135 PSF

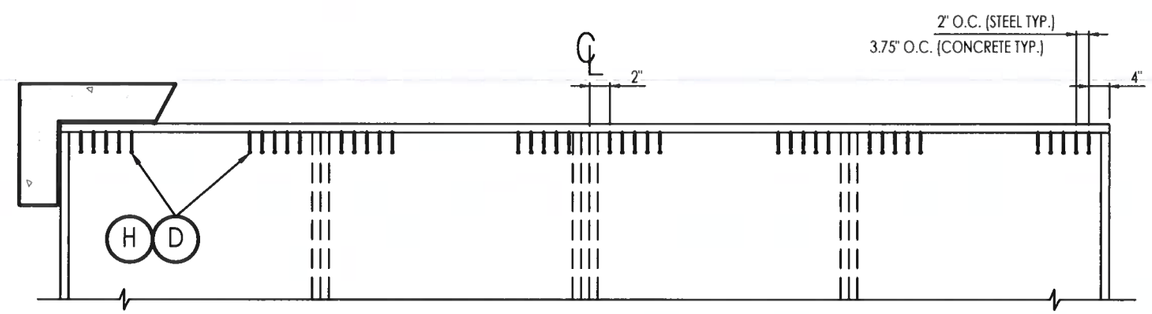

FRAME ANCHORING @ HEAD

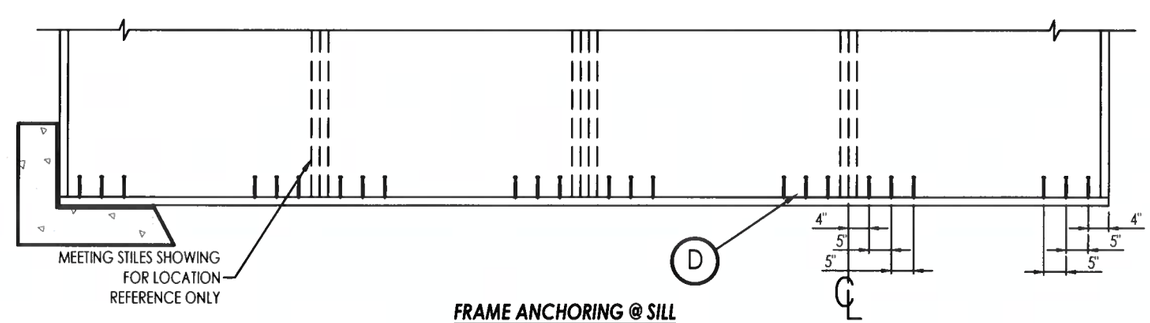

FRAME ANCHORING @ SILL

SUBSTRATE		ANCHOR SCHEDULE
CONCRETE	D	5/16" Ø HWH ITW Tapcon® XL concrete anchor with 1-3/4" min. embedment, 2-3/16" minimum edge distance and 3-3/4" minimum clearance to adjacent concrete anchors. Concrete is 3,000 PSI minimum conforming to ACI 301.
STEEL	H	1/4-20 HWH Hilti KWIK-FLEX® self drilling screws. Steel with 0.125" minimum wall thickness conforming to ASTM A500 Grade B, Fy=46,000 PSI & Fu=58,000 PSI or ASTM A653, Fy=33,000 PSI, Fu= 45,000 PSI. Minimum embedment of 3 threads through steel substrate, with 1" min. edge distance and 1" min. CL to CL spacing.

5008 TAMPA WEST BLVD.
TAMPA, FLORIDA 33634
PHONE: (813) 889-0718
FAX: (813) 886-0666

SUN METALS

PRODUCT:
SLIDING GLASS DOOR

PART OR ASSEMBLY:
ANCHORING
(MAX DP <= 135 PSF)

NO	DATE	DESCRIPTION	BY
7	7/14/25	UPDATE TO 8TH ED. (2023) FBC	ECV
6	9/21/20	UPDATE TO 7TH ED. (2020) FBC	JGB
5	8/9/19	UPDATE TO 6TH ED. (2017) FBC	ECV
2	2/26/16	CHANGE INT. .060 SGP TO .060 PVB	CO
1	2/17/15	UPDATE TO 5TH ED. (2014) FBC	LFS

REVISIONS

DATE: 02/26/16
SCALE: NTS
DWG. BY: CO
CHK BY: ECV
DRAWING NO.: FL-15903.2
SHEET: 11 OF 13

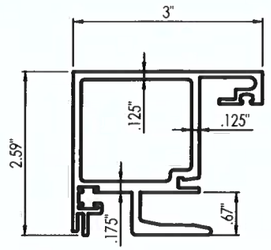

6 INTERLOCK STILE - FIXED PANEL
7/16" or 9/16" GLASS

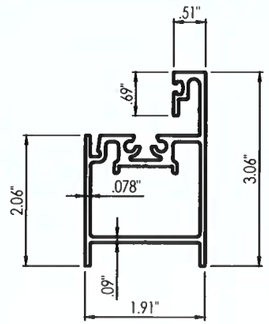

5 BOTTOM RAIL - MOVING PANEL
7/16" or 9/16" GLASS

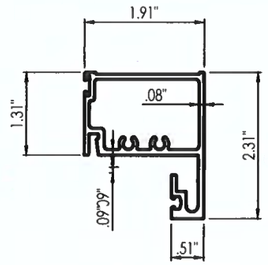

4 TOP RAIL
7/16" or 9/16" GLASS

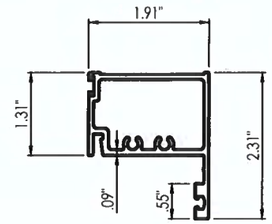

54 I.G. TOP RAIL
1- 5/16" GLASS

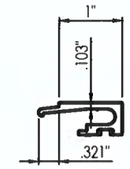

1 GLAZING BEAD
7/16" or 9/16" GLASS

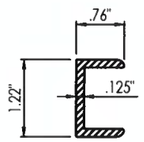

7 FIXED PANEL RETAINING CLIP

28 PRE-SET GASKET

29 PRE-SET GASKET

30 WEDGE

59 FOAM CAULK STOP

61 WEDGE

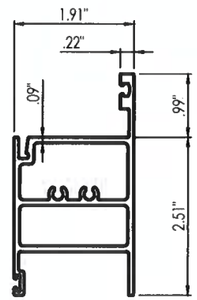

49 I.G. BOTTOM RAIL - FIXED PANEL
1- 5/16" GLASS

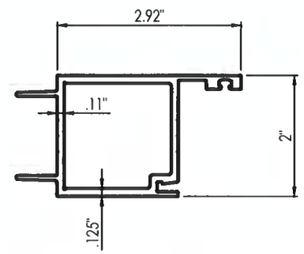

55 I.G. LEAD STILE
1- 5/16" GLASS

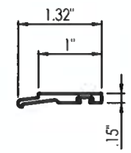

51 I.G. GLAZING BEAD
1- 5/16" GLASS

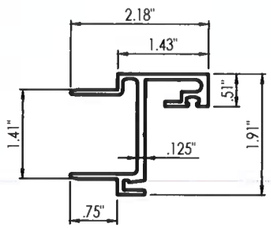

14 FIXED PANEL STILE
7/16" or 9/16" GLASS

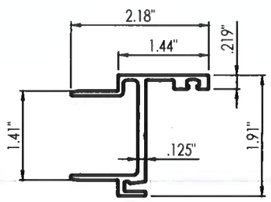

52 I.G. FIXED PANEL STILE
1- 5/16" GLASS

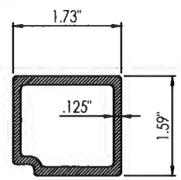

12 REINFORCEMENT

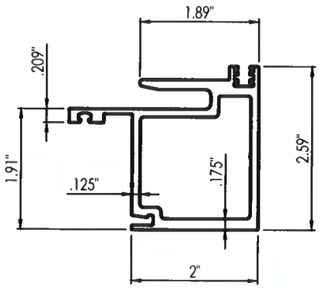

53 I.G. INTERLOCK STILE - MOVING PANEL
1-5/16" GLASS

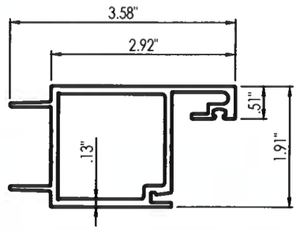

2 LEAD STILE
7/16" or 9/16" GLASS

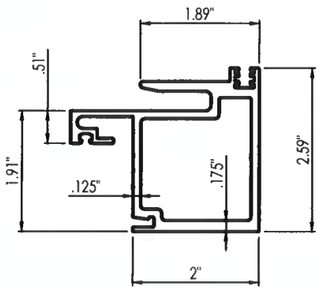

3 INTERLOCK STILE - MOVING PANEL
7/16" or 9/16" GLASS

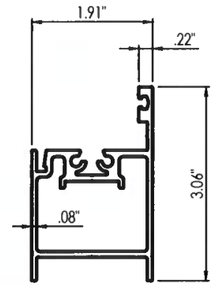

56 I.G. BOTTOM RAIL - MOVING PANEL
1-5/16" GLASS

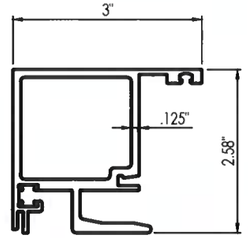

57 I.G. INTERLOCK STILE - FIXED PANEL
1-5/16" GLASS

GORDON D. THOMAS
LICENSE
No. 46718
STATE OF FLORIDA
PROFESSIONAL ENGINEER

8/11/25
FL46718

5008 TAMPA WEST BLVD.
TAMPA, FLORIDA 33634
PHONE: (813) 889-0718
FAX: (813) 886-0666

SUN METALS

PRODUCT: SLIDING GLASS DOOR

PART OR ASSEMBLY: COMPONENTS

NO	DATE	DESCRIPTION	BY
7	7/14/25	UPDATE TO 8TH ED. (2023)	ECV
6	9/21/20	UPDATE TO 7TH ED. (2020)	JCB
5	8/9/19	UPDATE TO 6TH ED. (2017)	ECV
2	2/26/16	CHANGE INT. .060 SCP TO .060 PVB	CO
1	2/17/15	UPDATE TO 5TH ED. (2014)	LFS

REVISIONS

DATE: 02/26/16

SCALE: NTS

DWG. BY: CO

CHK BY: ECV

DRAWING NO.: FL-15903.2

SHEET: 12 OF 13

BILL OF MATERIALS

ITEM #	DESCRIPTION	MATERIAL
D	5/16" x 2-3/4" HWH ITW TAPCON XL CONCRETE ANCHOR	STEEL
E	MASONRY - 3,000 PSI MIN. CONCRETE CONFORMING TO ACI 301	CONCRETE
F	3/16" x 2-3/4" HWH ITW TAPCON CONCRETE ANCHOR	STEEL
G	#10 x 1-1/2" SQ-PH ASSEMBLY SCREW	STL. STEEL
H	1/4-20 HWH HILTI KWIK-FLEX SELF DRILLING SCREW	STEEL
K	#10 x 3/4" HH SELT TAP SCREW	STL. STEEL
1	GLAZING BEAD 6063-T6 (9/16")	ALUM 6063-T6
2	LEAD STILE 6063-T6 (9/16")	ALUM 6063-T6
3	INTERLOCK STILE - MOVING PANEL 6005-T5 (9/16")	ALUM 6005-T5
4	TOP RAIL 6063-T6 (9/16")	ALUM 6063-T6
5	BOTTOM RAIL - MOVING PANEL 6063-T6 (9/16")	ALUM 6063-T6
6	INTERLOCK STILE - FIXED PANEL 6005-T5 (9/16")	ALUM 6005-T5
7	FIXED PANEL RETAINING CLIP 6063-T6	ALUM 6063-T6
8	FRAME HEAD 6063-T6	ALUM 6063-T6
9	FRAME SILL 6063-T6	ALUM 6063-T6
10	FRAME JAMB 6063-T6	ALUM 6063-T6
11	OXO ADAPTOR 6005-T5	ALUM 6005-T5
12	REINFORCEMENT 6005-T5	ALUM 6005-T5
13	OXO ADAPTOR REINFORCEMENT 6005-T5	ALUM 6005-T5
14	FIXED PANEL STILE 6063-T6 (9/16")	ALUM 6063-T6
15	XX ADAPTOR 6005-T5	ALUM 6005-T5
16	XX ADAPTOR REINFORCEMENT 6005-T5	ALUM 6005-T5
17	FRAME HEAD POCKET COVER 6063-T6	ALUM 6063-T6
18	FRAME SILL POCKET COVER 6063-T6	ALUM 6063-T6
25	WEATHERSEAL SEALANT (WS001) DOW 795	SILICONE
27	GLAZING SPACER	ALUM 6063-T6
28	GASKET, EPDM CLOSED CELL FOAM (9/16" GLAZING) (TREMCO)	EPDM
29	GASKET, EPDM CLOSED CELL FOAM (1-5/16" GLAZING) (TREMCO)	EPDM
30	WEDGE 70±5 EPDM (9/16" & 1-5/16" GLAZING) (TREMCO)	EPDM
31	BACKER ROD - CLOSED CELL EXTRUDED FOAM	POLYETHYLENE
34	SHIM	-
35	SETTING/ EDGE BLOCK	SILICONE
41	ROLLER ASSM.	STL. STEEL
42	REACTION CLIP 6005-T5	ALUM 6005-T5
43	TOE ANCHOR 6005-T5	ALUM 6005-T5
49	BOTTOM RAIL - FIXED PANEL 6063-T6 (1-5/16")	ALUM 6063-T6
51	I.G. GLAZING BEAD 6063-T6 (1-5/16")	ALUM 6063-T6
52	I.G. FIXED PANEL STILE 6063-T6 (1-5/16")	ALUM 6063-T6
53	I.G. INTERLOCK STILE - MOVING PANEL 6063-T6 (1-5/16")	ALUM 6063-T6
54	I.G. TOP RAIL 6063-T6 (1-5/16")	ALUM 6063-T6
55	I.G. LEAD STILE 6063-T6 (1-5/16")	ALUM 6063-T6
56	I.G. BOTTOM RAIL - MOVING PANEL 6063-T6 (1-5/16")	ALUM 6063-T6
57	INTERLOCK STILE - FIXED PANEL 6005-T5(1-5/16")	ALUM 6005-T5
58	BOTTOM RAIL - FIXED PANEL 6063-T6 (7/16" OR 9/16")	ALUM 6063-T6
59	CAULK STOP, EPDM CLOSED CELL FOAM (9/16" & 1-5/16" GLAZING) (TREMCO)	EPDM
60	STRUCTURAL SILICONE DOW 995	SILICONE
61	WEDGE 70±5 EPDM (9/16" & 1-5/16" GLAZING) (TREMCO)	EPDM

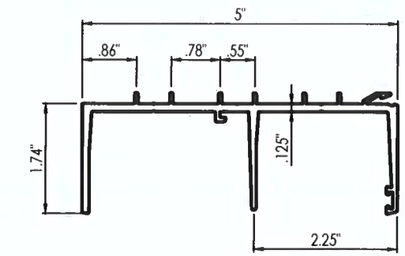

8 FRAME HEAD

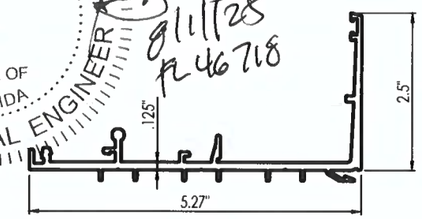

9 FRAME SILL

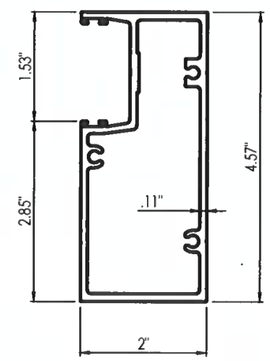

10 FRAME JAMB

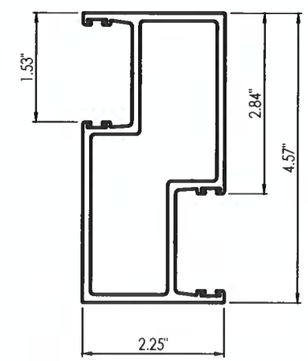

11 OXO ADAPTOR

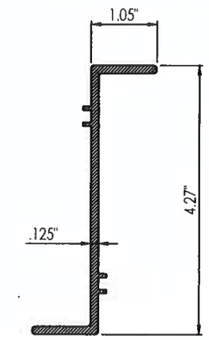

13 OXO REINFORCEMENT

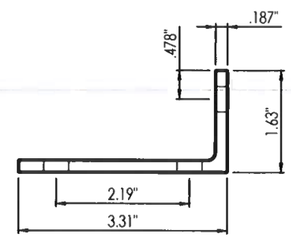

43 TOE ANCHOR

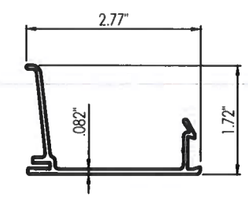

17 FRAME HEAD POCKET COVER

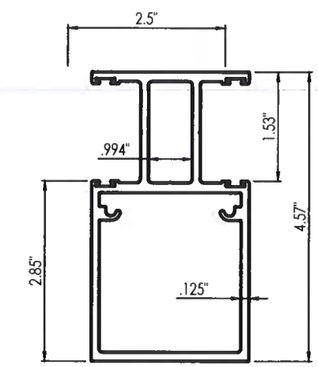

15 XX ADAPTOR

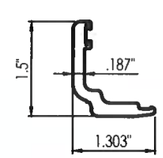

42 REACTION CLIP

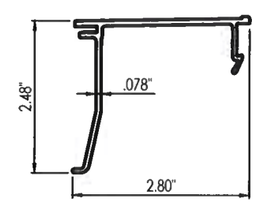

18 FRAME SILL POCKET COVER

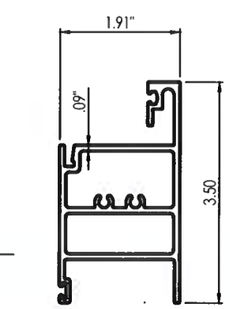

58 BOTTOM RAIL - FIXED PANEL
9/16" GLASS

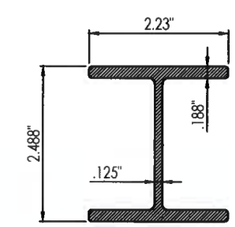

16 XX ADAPTOR REINFORCEMENT

GORDON D. THOMAS
LICENSE
No. 46718
STATE OF FLORIDA
PROFESSIONAL ENGINEER

8/11/25
FL 46718

5008 TAMPA WEST BLVD.
TAMPA, FLORIDA 33634
PHONE: (813) 889-0718
FAX: (813) 886-0666

SUN METALS

PRODUCT: SLIDING GLASS DOOR

PART OR ASSEMBLY: COMPONENTS & BILL OF MATERIALS

NO	DATE	DESCRIPTION	BY
7	7/14/25	UPDATE TO 8TH ED. (2023) FBC	ECV
6	9/21/20	UPDATE TO 7TH ED. (2020) FBC	JGB
5	8/9/19	UPDATE TO 6TH ED. (2017) FBC	ECV
4	3/14/17	REV PER ADDITIONAL COMMENTS	CO
2	2/26/16	CHANGE INT. .060 SGP TO .060 PVB	CO
1	2/17/15	UPDATE TO 5TH ED. (2014) FBC	LFS

REVISIONS

DATE: 02/26/16

SCALE: NTS

DWG. BY: CO

CHK BY: ECV

DRAWING NO.: FL-15903.2

SHEET: 13 OF 13